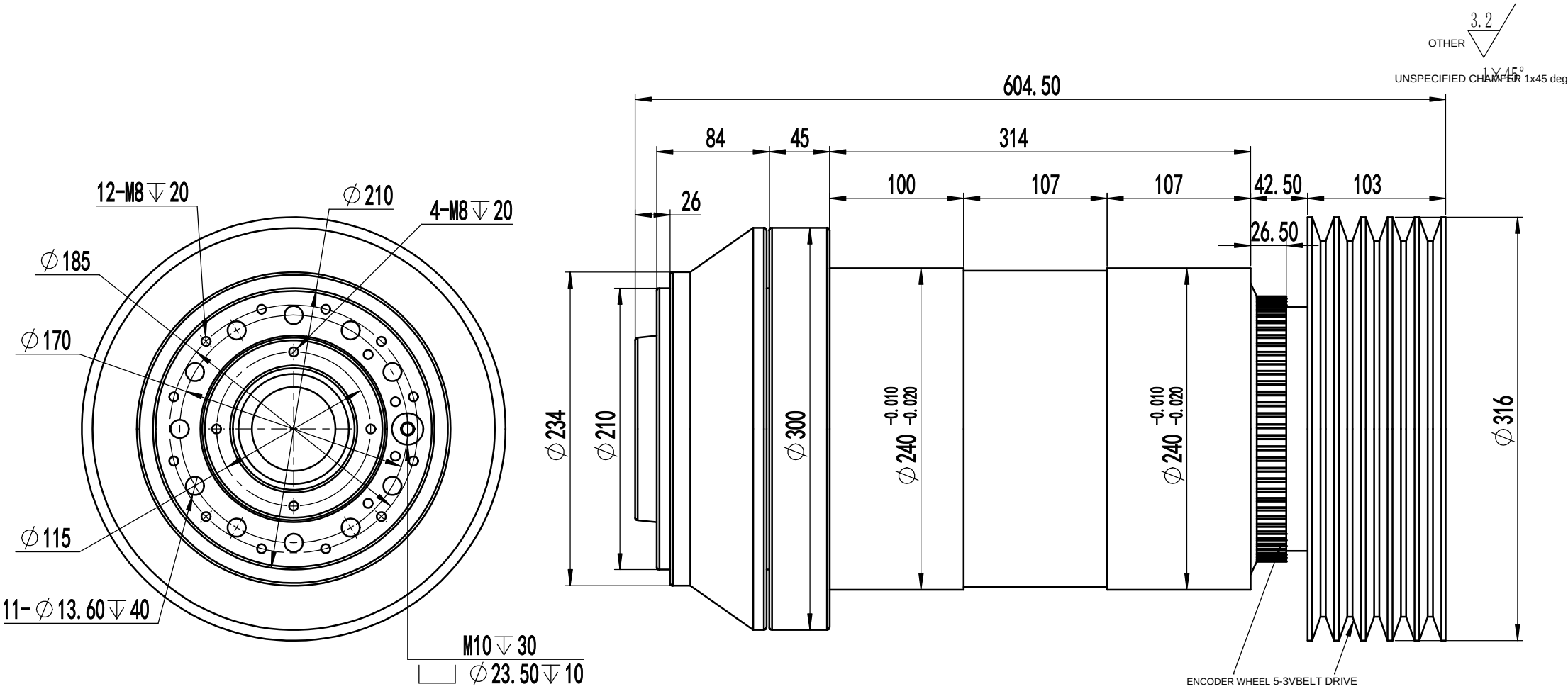

TECHNICAL INFORMATION		A2-8-240			
BEARING TEMPERATURE RISE	AMBIENT +20 deg	**SPINDLE NOSE RUNOUT**	0.003 mm	**MAXIMUM SPINDLE POWER**	15kw
MAXIMUM SPEED	5000 RPM	**BEARING SPECIFICATION**	FRONT NN3026K+7026*2 REAR NN3024K	**BALANCE GRADE**	G1
DRIVE TYPE	BELT DRIVE	**FLANGE FACE RUNOUT**	0.003 mm	**MAXIMUM SPINDLE TORQUE**	95N-m
SPINDLE BORE DIAMETER	Ø75	**BEARING LUBRICATION**	GREASE	**MOUNTING**	VERTICAL